MAPLEX GENERAL GUIDELINES

MAPLEX, AN ALL-NATURAL MATERIAL MADE BY WEIDMANN

WEIDMANN

CONTENTS

INTRODUCTION

These guidelines are intended to help designers and engineers develop products and components using Maplex. To ensure the best results, the processes described should be performed at Weidmann. However, many processes can be successfully performed outside our manufacturing facility. Refer to Sections 2 and 3 to determine if your product or component should be manufactured at Weidmann.

Except where differences are noted, these guidelines apply to both Maplex P and Maplex C. Both types are made using the same fibers but are processed differently. For applications that require stability or strength, specify Maplex P; for applications that involve significant bending or forming, specify Maplex C.

MAPLEX P (PERFORMANCE)

100% cellulose fibers. No chemicals added.

A strong, high-density, high-performance board with good dimensional stability. This product is typically used when high compressive or flexural strength is required. Maplex P is more rigid than Maplex C.

Available thicknesses: .040", 1/16", 1/8", 3/16", 1/4", 5/16"
Custom thicknesses from .039" to .315"
Sheet sizes up to 125" x 247"

MAPLEX C (CONTOUR)

100% cellulose fibers. No chemicals added.

A highly formable, medium-density board with moderate dimensional stability. It is ideal for making contoured shapes. This product has a softer appearance than Maplex P.

Available thicknesses: 1/32", 1/16", 1/8", 3/16"
Custom thicknesses from .031" to .188"
Sheet sizes up to 146" x 255"

MATERIAL PROPERTIES

Maplex is a distinctive, all-natural material that can be cut and formed using a variety of processes. Surprisingly strong and versatile, it is used as an alternative to wood, composites, plastic and metal in many applications. Maplex readily accepts paints, stains, oils, and adhesives. It is manufactured in our 160,000 square foot facility in Vermont.

COMPOSITION

Maplex is composed of many thin plies of softwood tree fibers. These specially selected fibers are cleaned, cut to uniform size, and suspended in water. The fibers go through a unique process that increases their surface area, boosting their potential for hydrogen bonding. Heat and pressure are then applied, releasing moisture and creating a strong, dense fiber matrix.

Most fiberboard manufacturers use low-grade fibers and bind them together using petrochemical resins. At Weidmann, we source premium fibers from sustainably managed forests and use nothing but water as a binder. As a result, Maplex is biodegradable and recyclable. (See Recycling and Disposal, page 21, for more information)

STRENGTH

Maplex is more resistant to bending than plywood, MDF and OSB of the same thickness. Therefore, you can often specify thinner material when using Maplex than other board materials. Maplex is also very resistant to compression and tension, and it does not dent as easily as other fibrous materials. Because of its density, Maplex machines more like aluminum than wood.

Some manufacturing and fabrication processes can disrupt the bonds between plies if they are not performed correctly, and the strength and appearance of the material may be compromised. (See Sections 2 and 3 for specific guidelines)

COMPARISON OF MATERIAL STRENGTHS (TYPICAL VALUES)

	Compressive Strength		**Tensile Strength**		**Modulus of Elasticity**		**Modulus of Rupture**	
	CMD* PSI	MD* PSI	CMD PSI	MD PSI	CMD PSI	MD PSI	CMD PSI	MD PSI
Maplex P	45000	45000	12000	16000	1.0x106	1.6x106	12000	15000
Maplex C	40000	40000	6000	10000	2.0x105	4.0x105	4350	5500
Birch Plywood	3480	3900	5000	5600	1.0x106	1.5x106	7100	9300
OSB	2465	2465	1450	1450	8.0x105	8.0x105	4200	4200
MDF	--	--	--	--	4.5x105	4.5x105	4500	4500
Masonite	--	--	--	3000	5.8x105	5.8x105	5800	5800
Douglas Fir	870	7400	--	11000	1.7x106	1.7x106	--	12000
Aluminum	42000	42000	42000	42000	11x106	11x106	--	--
Steel	60000	60000	60000	60000	29x106	29x106	--	--

* CMD = Cross Machine Direction; MD = Machine Direction (equivalent to "cross-grain" and "grain direction") Omitted values are either not applicable or not available.

WEIGHT

Weight should be considered carefully when using large sheets, designing a paneling system, or specifying hardware. Maplex is denser, and therefore heavier, than other board materials. For example, Maplex is approximately twice as dense as maple, MDF and OSB. However, Maplex is also stronger than most other wood and fiberboard materials. Thinner material can often be specified when using Maplex, thereby offsetting the difference in weight.

COMPARISON OF MATERIAL WEIGHTS (TYPICAL VALUES)

Sheet Size 1/4" x 4' x 8'	**41Density (lb/ft3)28**	**Weight (lbs)**
Maplex P	78	52
Maplex C	62	41
Birch Plywood	42	28
OSB	38-42	25-28
MDF	38-48	25-32
Masonite	62	41
Particleboard	45-55	30-37
Gypsum board	5752	38

FORMABILITY

Maplex is more formable than wood, plywood and fiberboard. At Weidmann, Maplex is bent and formed using proprietary techniques. While the processes are similar to those used in metal and plastic manufacturing, they have unique limitations and capabilities when applied to Maplex. (For more information, see Bending and Forming, page 14)

DIMENSIONAL STABILITY

Maplex is not as dimensionally stable as panel products impregnated with petrochemical resins. Because the only binder in Maplex is water, the material is susceptible to changes in humidity. Providing additional structure in the design of Maplex products and components will help mediate the effects of humidity changes. Sealing Maplex is also recommended for most applications. (See Finishing, page 20)

FIRE RATING

1/16" Maplex C has a Class B fire rating. Although Maplex P and other thicknesses of Maplex C have not yet been tested, we expect they would have a Class B rating as well.

CUTTING TECHNIQUES

Most woodworking and metalworking processes are applicable to Maplex. Due to its density and fiber strength, Maplex machines more like aluminum than wood. Tools used for cutting should be kept very sharp. Thin Maplex (1/16" or less) can be cut with a utility knife.

For information on the appearance of edges after cutting operations, please see Edge Conditions, page 12. Cutting and profiling operations can leave sharp edges. For your safety, they should be removed by carefully breaking the edges with a sanding block or file.

THE FOLLOWING PROCESSES ARE NOT RECOMMENDED FOR MAPLEX:

- Laser cutting, which can darken or burn the material
- Waterjet cutting, which can disrupt ply adhesion
- Hand carving, which is difficult due to the laminar ply composition of Maplex

SAWS

Maplex is cut with circular saws, band saws, and jigsaws. The equipment and the workpiece should be very stable and vibration free. Use sharp blades and correct cutting speeds to avoid smoking or burning. Ensure that blades have tooth gullets large enough to accomodate chips from the material while cutting. If necessary, use an OSHA-approved air nozzle to remove chips and sawdust from the kerf and to remove heat from the workpiece and blade.

Band Saws

Use bimetal blades with alternating teeth. For general-purpose cutting, use blades with 3 or 4 teeth per inch. Increase tooth count for thin material.

Recommended Settings

Blade speed: 1500 - 3000 ft/min.

Circular Saws

Use saw blades with carbide teeth. Use alternate top bevel teeth with a raker tooth every 3rd or 5th tooth.

Recommended Settings

Feed: 0.004"- 0.012"/tooth

Speed: 170 - 200 ft/sec (tooth tip velocity)

ROUTERS

Routers are used for profiling operations such as radiusing, chamfering, contouring, and slotting. Blanks for forming and bending are profiled using our CNC routers. Holes, registers, slots and other features for subsequent processes can be included in one routering operation.

Routers

Use a CNC router with at least 5 hp spindles or a 1-2 hp hand router.

Recommended Settings

Feed: 0.005”/tooth

Speed: 18,000 rpm

DRILLS

Metal and wood cutting bits are used to drill Maplex. Tapered bits and brad tip bits are particularly effective. To avoid disrupting ply adhesion, use a drill press and clamp the board firmly. Hand drills can also be used for holes up to 1/2” in diameter. Test and adjust your setup before drilling a final piece.

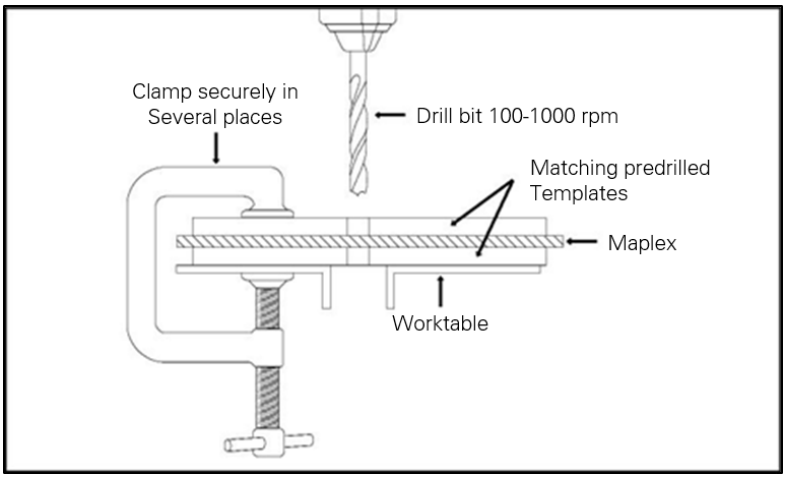

Clamp securely and use matching templates to avoid flaring or tearing of plies.

Drills

Use a “peck drilling” technique, frequently removing the bit to clear away chips. Use matching templates above and below the workpiece to prevent flaring. Drill bits should be very sharp.

Recommended Settings

Feed: 0.002”- 0.008”/tooth

Speed: 100 to1000 rpm

TAPS AND DIES (THREADING)

Maplex P is threaded with standard metalworking taps and dies. Maplex parts in thicknesses less than 1/8" are too thin to incorporate threads. Threading is not recommended for Maplex C.

Taps and Dies

Clamp the material securely. Use threads no finer than 1/4"-20.

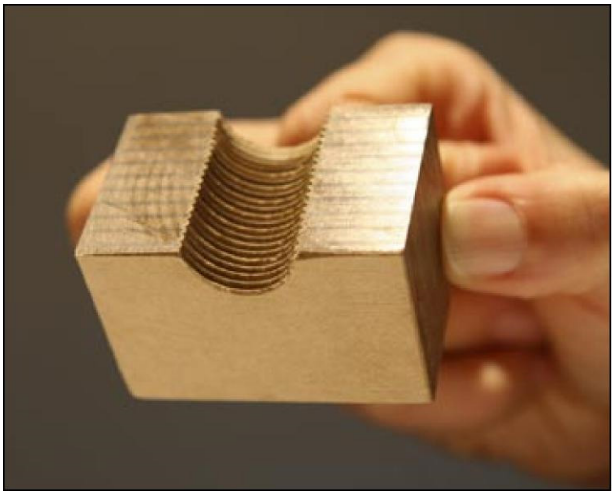

To make this part, multiple layers of Maplex were laminated together, then drilled and threaded. The part has been cut in half to show thread detail.

PLANES

Machine planers are used to reduce the thickness of Maplex P and to remove the surface screen pattern. Planing is not recommended for Maplex C. The planers at Weidmann have a capacity of 24" in width.

Planes

Powered hand planes are suitable for light work when equipped with solid carbide knives. Production planing requires heavy-duty equipment with power feed, sharp knives, and at least 0.5 hp/inch of width.

SHEARS

Shearing equipment is used to cut Maplex when a smooth edge is not required. (see Edge Conditions, page 12) Handheld shears can be used to cut thin Maplex sheets. The maximum shearing thicknesses are 1/8″ for Maplex P and 3/16″ for Maplex C.

Shears

All shearing processes require rigid and stable machines. A 10-gauge sheet metal shear will cut Maplex P up to 1/8″ thick. Use the smallest available shear angle to minimize curl in narrow pieces. Use standard square edge and sharp blades.

Recommended Settings

Blade clearance: 0.002″-0.003″

PUNCHES

CNC punching is a process used for making blanks and adding registers for forming and machining. It is also used for cutting custom patterns, shapes, and logos into Maplex sheets. This can be especially useful for paneling applications. Weidmann has a variety of punches available that can be combined to create a range of shapes. Custom dies can be ordered as well. Refer to the Maplex Punching Guidelines for more information.

Punches

Use tool steel punches (D-2 or equivalent) hardened to 58-62 Rockwell C. The maximum punching thickness is 1/8″ for Maplex P and 3/16″ for Maplex C.

Recommended Settings

Punch-to-die clearance: 0.0015″

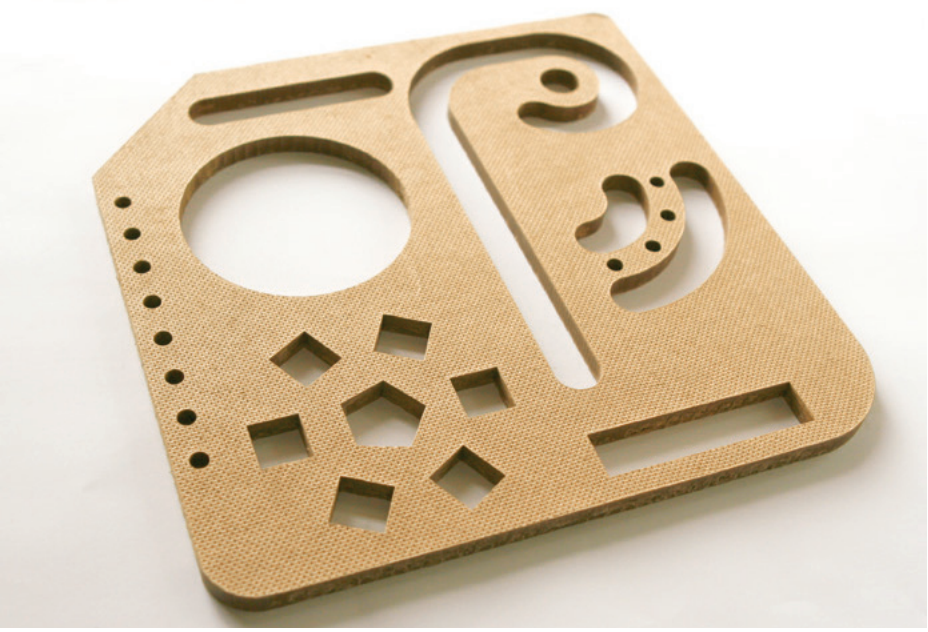

This sample shows some of the shapes that can be CNC punched at Weidmann.

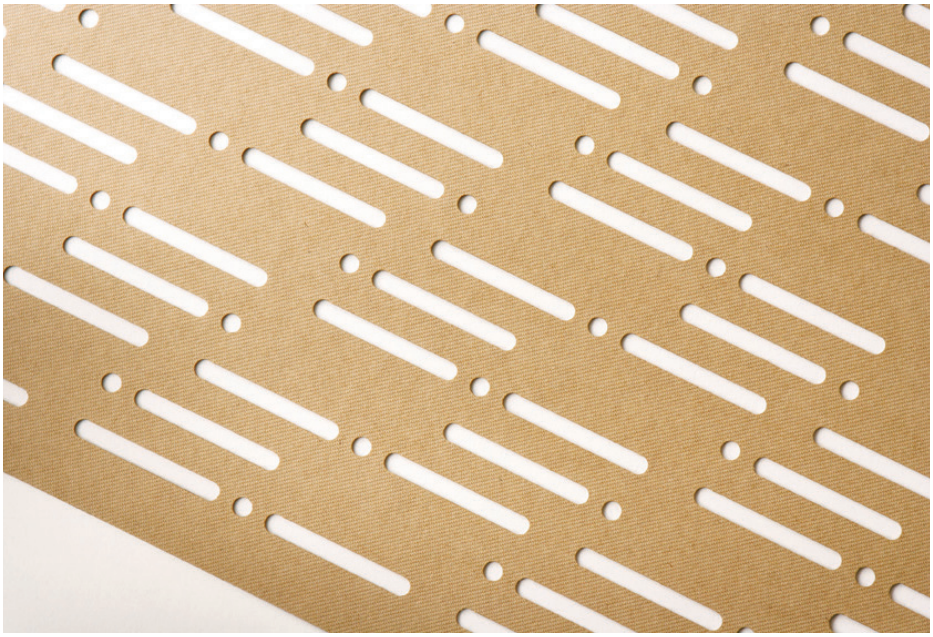

This pattern was cut using a combination of existing circular and rectangular dies.

EDGE CONDITIONS

When you place a custom order, you may be asked to specify "Edge Condition." The edge condition of a Maplex part is determined by the way the material is cut. The number of available options depends on the dimensions of the material you order. Of the four methods of cutting Maplex, routering produces the smoothest, cleanest edge.

Sheared edge
Maximum shearing thickness: 1/8" for Maplex P and 3/16" for Maplex C.

Punched Edge
Maximum punching thickness: 1/8" for Maplex P and 3/16" for Maplex C. Punched edges and sheared edges look similar, but punched edges are usually smoother. Thin Maplex (less than 1/16") is usually punched or sheared.

Sawed Edge
Minimum sawed thickness: 1/32" for Maplex P and Maplex C.

CNC Routered Edge (Straight Cut)
Minimum thickness: 1/16″ for Maplex P and Maplex C

CNC Routered Edge (Beveled)
Minimum thickness: 1/8″ for Maplex P and Maplex C

Note: *When you order routered parts from Weidmann, the edges will appear as they do in the photos above. If you use your own router, however, you may get a thin burr on the top or bottom edges. The burr is easily removed with a sanding block or file. Use quick downward strokes, angling the block or file away from the face of the material to avoid damaging the surface pattern.*

BENDING AND FORMING

Maplex can be bent into simple curves and formed into complex three-dimensional shapes. The formability of Maplex exceeds that of other fiberboard materials. It is less ductile than plastic and metal, however. If Maplex is bent or stretched beyond its range, the surface plies will tear or wrinkle.

Please contact customer service if you are unsure about the feasibility of your design. Through careful design and engineering, Maplex can be formed into surprisingly complex shapes.

Note: *Because forming Maplex requires specialized equipment and proprietary processes, we recommend that all forming and extreme bending be performed at our manufacturing facility.*

HAND BENDING

Thin Maplex (less than 1/8") is quite flexible and can be bent by hand. Maplex sheets are used to create smooth, sweeping curves by bending the material and fastening it into position against an underlying structure.

Making sharp bends by hand is not recommended. The plies will separate from one another and the strength of the material will be compromised.

MACHINE FORMING

Single Axis Forming: Permanent, single axis bends are made using mating tools. To ensure consistent, high quality results, the radius of the bend should be no less than 16 times the thickness of the material. For example, 1/8" Maplex has a 2" minimum bending radius.

New processes are in development at Weidmann that will make it possible to bend smaller radii using thicker material in the future.

Single Axis Forming
Maximum thickness: 3/16" for Maplex C and 1/8" for Maplex P
Bending thicker material requires specialized tooling.

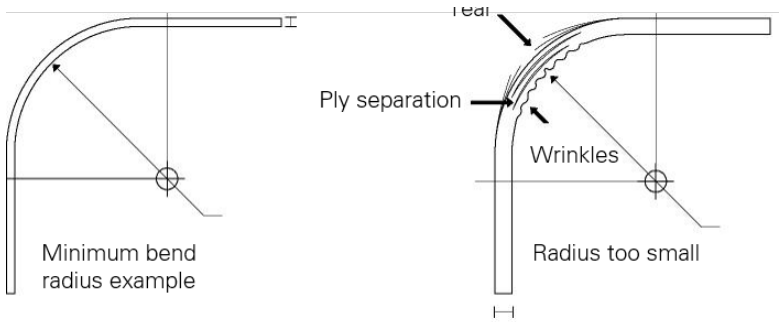

The minimum bending radius is 16 times the thickness of the material. Tighter bends will disturb ply adhesion, creating tears and wrinkles.

Single axis bends are made using mating tools.

Roll Forming: Cylindrical shapes are made from flat sheets of Maplex using a rolling machine. The minimum diameter of a cylinder is 80 times the material thickness. For example, 1/8″ Maplex can be used to make cylinders that are 10″ in diameter or larger.

Roll Forming
Maximum thickness: 3/16″ for Maplex C and 5/16″ for Maplex P

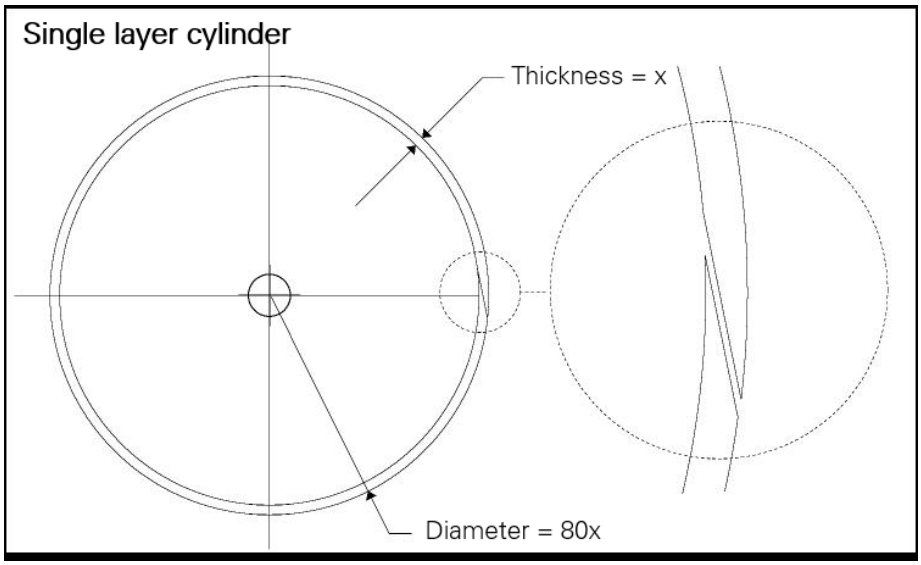

The minimum diameter for a cylinder is 80 times the material thickness.

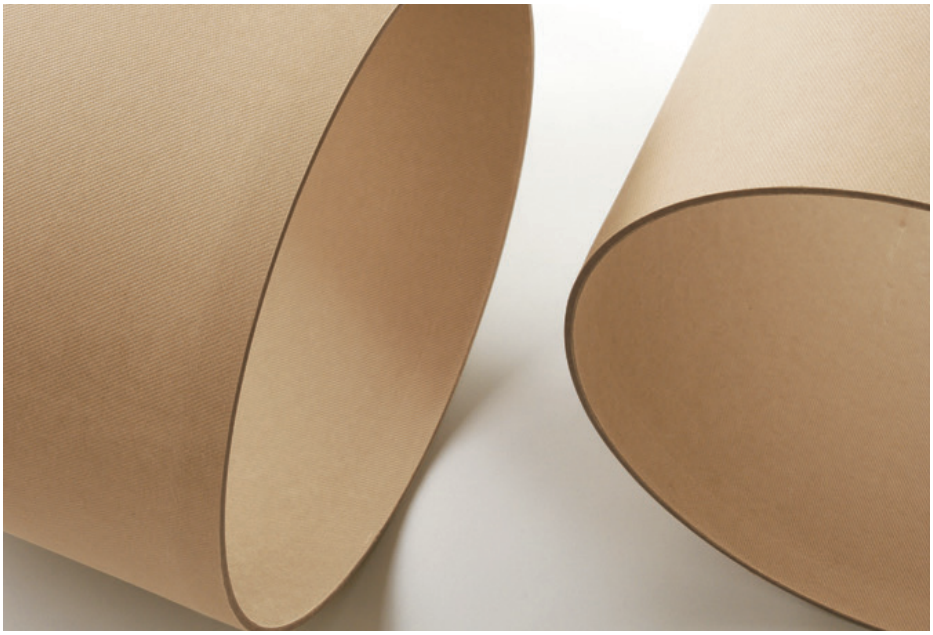

Cylinders are made by rolling a sheet of Maplex and gluing the ends together.

Multiple Axis Forming: Due to the many variables involved in multiple axis forming, designs must be evaluated on an individual basis. Please contact customer service for more information.

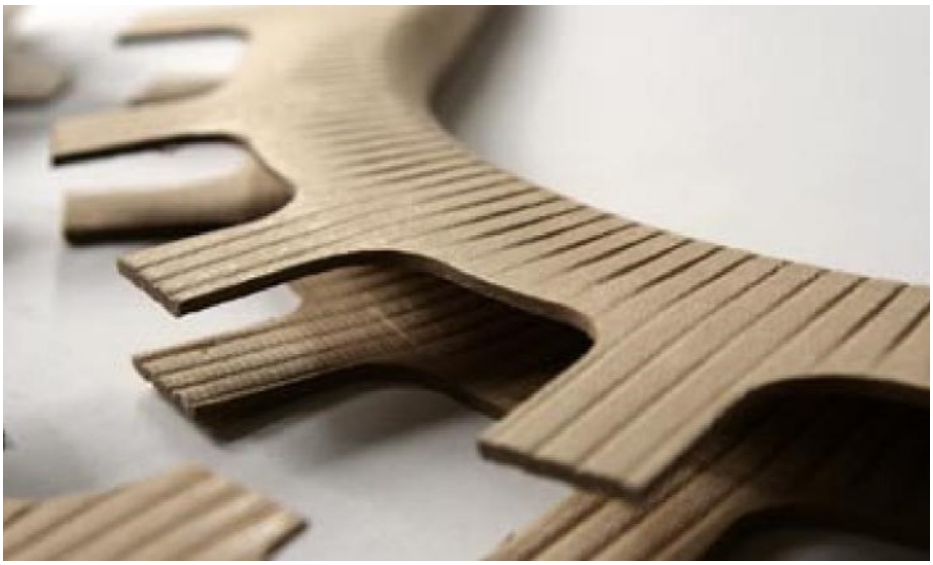

Compound shapes are formed from sheets of Maplex.

Close-up of a formed part.

Tools for Forming: Prototyping tools for forming operations are made at Weidmann using laminated Maplex. After design approval, tools can be ready as quickly as 2 weeks. Metal tools, which are used for large production runs, usually require a minimum of 8 weeks of lead time. In most cases, mating tools are used to form an entire blank in a single operation.

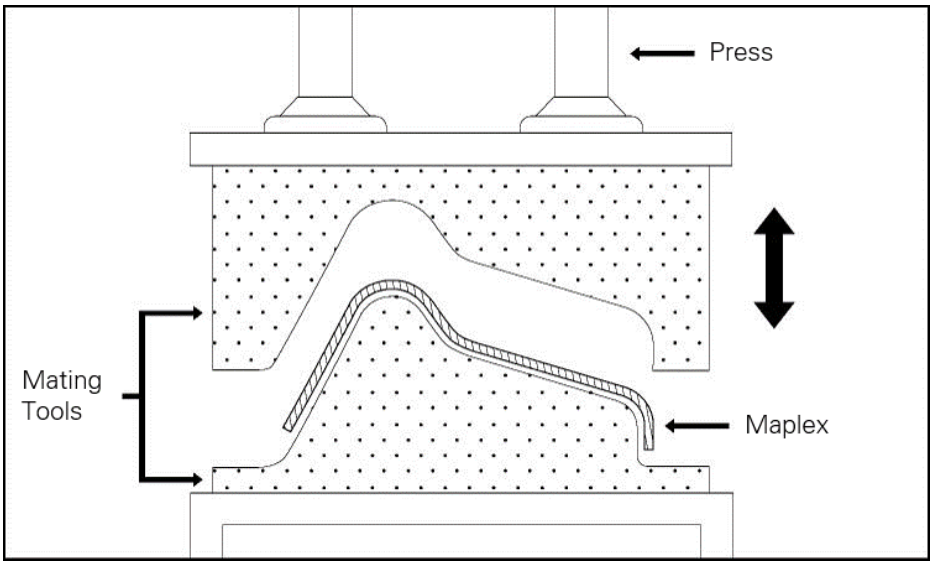

Mating tools are used for most forming operations.

ADHESIVES AND ASSEMBLY

Maplex should be allowed to acclimatize for two days before machining or gluing. This will help avoid potential difficulties associated with dimensional changes.

ADHESIVES

Maplex is glued using a wide range of adhesives. Surface glues like epoxy and contact cement work well but require greater surface area to avoid ply separation. Due to the multi-ply structure of Maplex, glues that penetrate into the material are preferable. Weidmann recommends the following glues:

- Wood glues
- Casein (milk-based glue)
- Dextrin (sugar-based glue)

Use clamps and a strong, flat backing material to distribute pressure evenly throughout the assembly. Follow the adhesive manufacturer's instructions for clamping time and pressure.

JOINERY

Many woodworking techniques for joinery can be applied to Maplex. Make sure to allow ample glue surface to prevent ply separation. Strength does not differ as much between the grain and cross-grain directions with Maplex as it does with solid wood.

MECHANICAL ATTACHMENTS AND ASSEMBLY

Screws, nuts and bolts, threaded inserts and other hardware are used to join parts and to allow for later disassembly. Self-threading screws and similar hardware may create a bulge around the perforation when inserted (for recommendations, see Drills, page 8).

Drilling or screwing into the edge of Maplex should be avoided.

FINISHING AND SURFACE TREATMENTS

SANDING AND FILING

The edges of Maplex can be sanded with any type of belt, disk, cylindrical or hand sanding equipment. For a burnished finish, begin with medium grit sandpaper and then switch to progressively finer grits. The front and back surfaces of Maplex can be sanded as well, but they will become slightly "furry" instead of smooth.

To "break" an edge, use a hand file or sanding block (80 grit or finer) and remove a minimum amount of material. Angle the block or file downward, away from the face of the material, to avoid damaging the surface pattern.

FINISHING

For most applications, Maplex should be finished to protect it from moisture, stains and abrasion. As with any wood or fiber product, surface coatings help protect Maplex against stains, abrasion and changes in humidity. When handling uncoated Maplex, check that all work surfaces are clean and dry to avoid staining the material.

Many wood finishing products, such as linseed oil, carnauba wax, acrylics and urethanes, are suitable for Maplex. Woods stains and paint can be applied to Maplex as well. However, finishing products that contain a high percentage of water may cause Maplex to warp. Test all staining and finishing products on scrap pieces before proceeding with the final application. Applying finishes with a sprayer generally yields better results than brush applications.

Maplex coated with finishes containing only natural ingredients can be composted or collected as "green waste" at the end of a product's useful life. The application of synthetic finishing products makes it difficult or impossible to recycle Maplex. (See Recycling and Disposal, page 21)

VENEERING

Maplex can be covered with decorative materials such as veneers, foils, papers, and fabric. (See Adhesives, page 19)

SCREEN PATTERN

Maplex has a screen pattern of small indentations that is applied to the surface during the board-making process. It is more visible on Maplex P than Maplex C.

If preferred, the screen pattern can be removed by planing. (See Planes, page 9) Maplex boards up to 24" wide can be planed at Weidmann.

SAFETY, STORAGE AND DISPOSAL

SAFETY

Maplex can be safely processed by following industry-standard safety procedures used in woodworking and construction. A Material Safety Data Sheet (MSDS) is available at www.weidmann-csm.com or by contacting customer service. Please consult the MSDS for safety, health, handling, and disposal guidelines.

STORAGE

Proper storage of Maplex will help protect it from moisture, dust, and physical damage. Like other finish-grade surfacing materials, Maplex is susceptible to scratches and dents and should be handled with care.

- Keep Maplex completely wrapped in its original packaging until needed.
- Avoid exposing Maplex to extremely high or low humidity levels.
- Store flat in an indoor area.
- Cover with an opaque material, as prolonged exposure to direct sunlight can cause fading.
- Re-package any unused Maplex as it was originally received.

RECYCLING AND DISPOSAL

Uncoated Maplex is 100 % biodegradable and can be composted or collected as "green waste" by local municipalities. Maplex coated with finishes containing only natural ingredients can also be composted or collected as green waste.

Uncoated Maplex is also 100% recyclable. Maplex fibers are of very high quality and are compatible with paper and cardboard for recycling. However, special equipment may be needed to recycle Maplex due to its high strength and density. Both natural and synthetic coatings may be considered contaminants because they can interfere with the recycling process.

At Weidmann, virtually all scrap material is reused within our facility. We also reuse clean, uncoated Maplex that customers return to us.

11/2019

Disclaimer

Weidmann products are guaranteed when used in accordance with our instructions. The great variation in applications, including environmental factors, attachment methods, conditioning, coatings and coating application techniques, as well as the lack of control that we exert over such matters, affects the extent of our liability in use. It is the user's responsibility to determine the suitability and safety of the product for any particular application. Our liability, whether express or implied, is limited to replacement of the product or a refund of the purchase price and does not include liability for labor costs or consequential damages. This limited warranty may not be modified or extended by manufacturer's representatives, distributors or dealers of Weidmann products.

Weidmann Holding AG
Neue Jonastrasse 60, 8640 Rapperswil, Switzerland
www.weidmann-csm.com